ROTOR BIKE·COMPONENTS

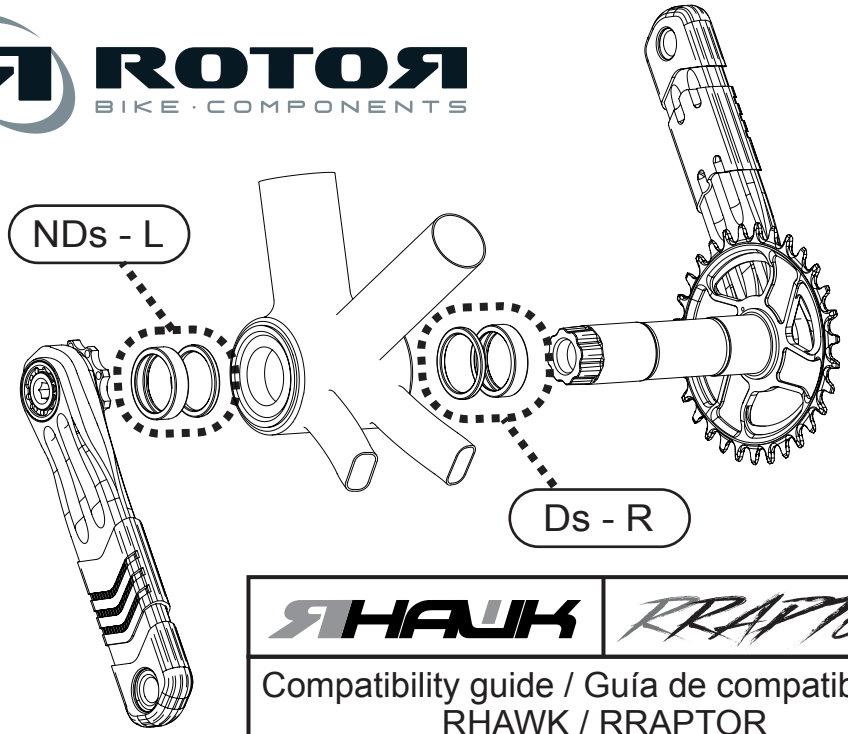

RHAWK | RRAPTOR

Compatibility guide / Guía de compatibilidad:
RHAWK / RRAPTOR

DH AXLE

Frame / Cuadro	W	D	NDs - L Type A: 2,5mm	NDs - L Type B: 5,5mm	NDs - L Type C: 8,5mm	NDs - L Type E: 0,5mm	NDs - L Type F: 3,0mm	Ds - R Type A: 2,5mm	Ds - R Type B: 5,5mm	Ds - R Type C: 8,5mm	Ds - R Type E: 0,5mm	Ds - R Type F: 3,0mm	Compatible BB / Pedalier compatible
BB89	89,5mm	41mm			X					X	X		Press Fit 4130
BB92	91,5mm	41mm		X			X		X		X		Press Fit 4130
BB30 - 73	73mm	42mm			2X		X			2X	X	X	BB30 - Bearing Kit
PF30 - 73	73mm	46mm	X		2X			X		2X	X		Press Fit 4630 UBB 4630
PF30 - 83	83mm	46mm		X	X				X	X			Press Fit 4630 UBB 4630
PF107	107mm	41mm											Press Fit 4130
BSA - 73	73mm	BSA Thread			X					X			BSA30
BSA - 83	83mm	BSA Thread					X				X	X	BSA30

BOOST AXLE

Frame / Cuadro	W	D	NDs - L Type A: 2,5mm	NDs - L Type B: 5,5mm	NDs - L Type C: 8,5mm	NDs - L Type E: 0,5mm	NDs - L Type F: 3,0mm	Ds - R Type A: 2,5mm	Ds - R Type B: 5,5mm	Ds - R Type C: 8,5mm	Ds - R Type E: 0,5mm	Ds - R Type F: 3,0mm	Compatible BB / Pedalier compatible
BB89	89,5mm	41mm					X				X	X	Press Fit 4130
BB92	91,5mm	41mm	2X								X		Press Fit 4130
BB30 - 68	68mm	42mm	X		X		2X	X		X		2X	BB30 - Bearing Kit
BB30 - 73	73mm	42mm	X		X		X	X		X	X	X	BB30 - Bearing Kit
BB84	84mm	42mm			X					X			BB30 - Bearing Kit
PF30-FSi Ai	83mm	46mm	X		X	2X			X				Press Fit 4630 UBB 4630
PF30 - 68	68mm	46mm	X		X		2X	X		X		2X	Press Fit 4630 UBB 4630
PF30 - 73	73mm	46mm	X		X	X	X	X		X	X	X	Press Fit 4630 UBB 4630
BSA - 68	68mm	BSA Thread	X				X	X			X	X	BSA30
BSA - 73	73mm	BSA Thread					X					X	BSA30

STANDARD AXLE

Frame / Cuadro	W	D	NDs - L Type A: 2,5mm	NDs - L Type B: 5,5mm	NDs - L Type C: 8,5mm	NDs - L Type E: 0,5mm	NDs - L Type F: 3,0mm	Ds - R Type A: 2,5mm	Ds - R Type B: 5,5mm	Ds - R Type C: 8,5mm	Ds - R Type E: 0,5mm	Ds - R Type F: 3,0mm	Compatible BB / Pedalier compatible
BB89	89,5mm	41mm				X					X		Press Fit 4130
BB92	92mm	41mm	BB92 not compatible - Use Boost Axle -										
BB30 - 68	68mm	42mm	X		X		X	X		X		X	BB30 - Bearing Kit
BB30 - 73	73mm	42mm	X		X			X		X	X		BB30 - Bearing Kit
BB84	84mm	42mm	X				X	X			X	X	BB30 - Bearing Kit
PF30-FSi Ai	83mm	46mm			X	X						X	Press Fit 4630 UBB 4630
PF30 - 68	68mm	46mm	X		X		X	X		X		X	Press Fit 4630 UBB 4630
PF30 - 73	73mm	46mm	X		X			X		X	X		Press Fit 4630 UBB 4630
BSA - 68	68mm	BSA Thread	X					X			X		BSA30
BSA - 73	73mm	BSA Thread											BSA30